SHOWER ENCLOSURES
SHOWER SCREENS

DUSEL shower enclosures integrate modern design, precise manufacturing and high quality components. We produce all major components, including the glasses, frames, hinges, door handles and the base in-house.

This provides us with the total control over our product quality and puts us in front of most of our competitors.

Contents

About Dusel 2

DL series 3

SHOWER ENCLOSURES

A5 series 13

A9 series 17

A6 series 25

A11 series 33

A7 series 37

BATHTUBS

DA series 41

SHOWER TRAYS

Easy Plumb Series 59

DUSEL

SHOWER ENCLOSURES
SHOWER SCREENS

DUSEL shower enclosures integrate modern design, precise manufacturing and high quality components. We produce all major components, including the glasses, frames, hinges, door handles and the base in-house.

This provides us with the total control over our product quality and puts us in front of most of our competitors.

German Design & Quality Concept

Over decades, German engineered products have been considered the benchmark in technology and quality. German products have been engineered to simply work perfectly. The constant drive to improve on the status quo and craft better engineered products created a powerful, world famous image.

At Dusel we embrace this tradition of never being content with the present status in all our business activities. We design, manufacture and distribute high quality shower enclosures to an international audience. Dusel stands for innovative design, focus on quality and integrity. Being distributed worldwide, Dusel products contribute to better life quality for its international customers. Ever since the very first day all of our business activities have been built on three columns: innovation, quality and people.

Our Values

In all our business activities we embrace our core values:

- **Quality:** We manufacture high quality and durable products.
- **Integrity:** We are real and stand by our word.
- **Dedication:** We believe in our mission and pursue the best possible results.
- **Passion:** We love what we are doing.
- **Innovation:** We constantly question and improve.

Innovation

At Dusel we never stand still. We are always thriving to improve ourselves, our products and the support we provide to our customers. Working close with our customers, identifying their needs and listening to their suggestions have allowed us to create products close to the pulse of time and to their future users' requirements. All our products are designed and engineered in-house. This guarantees short distances, immediate feedback and enables us bringing new ideas to the market sooner.

Quality

Dusel Shower enclosures have been designed, engineered and tested to last. We set ourselves a strict quality policy against which we measure all our activities. For us quality is a broader concept than purely products of high quality. We see customer satisfaction and service quality as integral parts of our quality approach.

People

One of the secrets of our success is the people behind the business. Experienced management, innovative designers, well-trained engineers and motivated workers are at the heart of Dusel. Our team is dedicated to create products that make the most important people happy: our customers.

DUSEL

DL

DL Series shower enclosure feature ultra-slim top and bottom profiles. Clever engineering makes the rollers practically invisible from the outside, all for a clean look. Easy Installation and Easy Cleaning come as standard. All DL-Series models are available in durable automobile grade black or traditional chrome finish.

Ultra-Slim Profiles: DL series shower enclosures feature ultra-slim aluminium frame profiles without compromising stability or functionality.

MINIMALIST IN EVERY ASPECT

Every detail has been design with the same design language in mind. The shape of the door handles elegantly resonates the ultra-slim profiles' characterizing look.

1

IT'S ALL ABOUT THE DETAILS

A great product is all about the details. Dusel shower enclosures are designed with maximum attention to detail, every detail. Beautifully designed and carefully crafted components unite to great shower enclosures. Hidden fixtures, concealed profiles and minimalistic hardware are just a few of the outstanding features.

Every product design is carefully engineered and relentlessly tested before being considered ready for the market. Dusel stands for dedication and dependability.

2

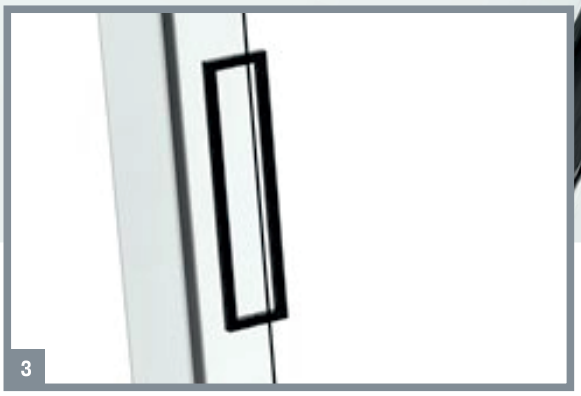
3

4

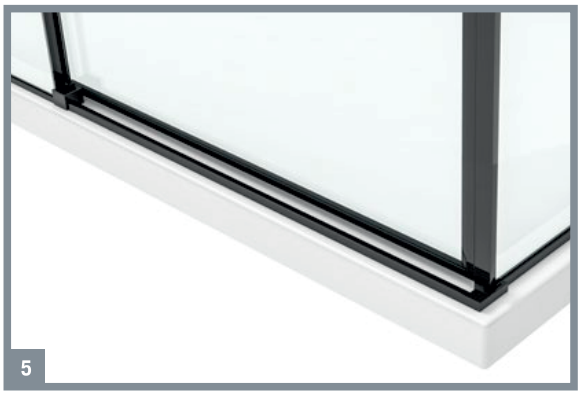
5

1. Compact Rollers
A new roller design was created to make the rollers practically invisible from outside.

2. Slim Door Handles
All sliding door models of DL series feature straight slim door handles.

3. Pivot Door Handle
All pivot door models of DL series are equipped with highly practical yet minimalistic door handles.

4. Pivot Door Hinges
The elegantly shaped pivot door hinges have been designed in the same minimalist style as the rest of the shower enclosure.

5. Easy Install & Clean
All sliding door feature Easy Install & Clean bottom rollers. They can be put in place and released for cleaning within seconds.

DL 194

Door type	Sliding door			
Rollers	Top round brass single roller			
Door handle	Stainless steel 500mm			
Profiles	Aluminum profile	800 x 800 x 1950 mm 900 x 900 x 1950 mm		
Finish	chrome	1000 x 1000 x 1950 mm	6 mm	10 mm

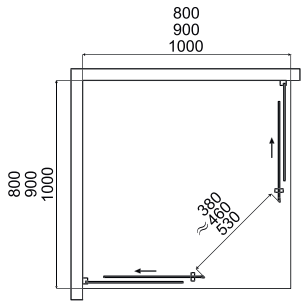

DL 194 BLACK

Door type	Sliding door
Rollers	Top round brass single roller
Door handle	Stainless steel 500mm
Profiles	Aluminum profile
Finish	matte black

800 x 800 x 1950 mm
900 x 900 x 1950 mm
1000 x 1000 x 1950 mm

6 mm

10 mm

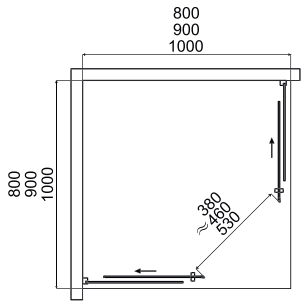

DUSEL

DL 197

Door type	Pivot door
Rollers	Square zinc pivot hinge top and bottom
Door handle	Stainless steel 500mm
Profiles	Aluminum profile
Finish	chrome

800 x 800 x 1950 mm
900 x 900 x 1950 mm
1000 x 1000 x 1950 mm

6 mm

10 mm

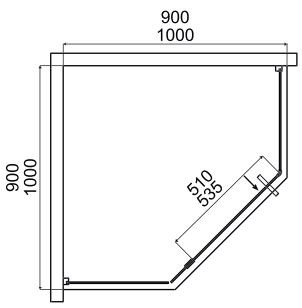

DL 197 BLACK

Door type	Pivot door
Rollers	Square zinc pivot hinge top and bottom
Door handle	Stainless steel 500mm
Profiles	Aluminum profile
Finish	matte black

800 x 800 x 1950 mm
900 x 900 x 1950 mm
1000 x 1000 x 1950 mm

6 mm

10 mm

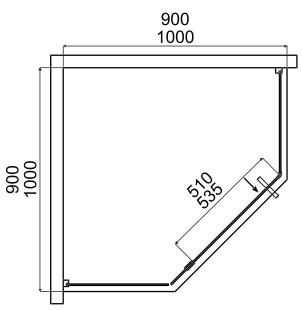

DL 191 + DL 195

Door type	Sliding door
Rollers	Top round brass single roller
Door handle	Stainless steel 500mm
Profiles	Aluminum profile
Finish	chrome

800 x 800 x 1950 mm
900 x 900 x 1950 mm
1000 x 1000 x 1950 mm

6 mm

10 mm

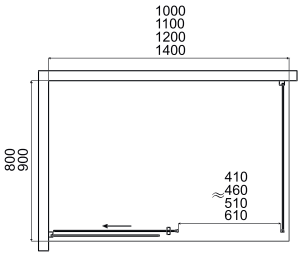

DL 191 + DL 195 BLACK

Door type	Sliding door
Rollers	Top round brass single roller
Door handle	Stainless steel 500mm
Profiles	Aluminum profile
Finish	matte black

800 x 800 x 1950 mm
900 x 900 x 1950 mm
1000 x 1000 x 1950 mm

6 mm

10 mm

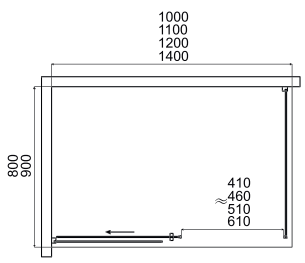

DUSEL

A5 SERIES

The A5 shower enclosure series features parallel sliding doors and solid glide rails. Convenient quick release rollers guarantee simple and quick cleaning. Available for corner installation and as shower screen version.

CORNER ROUND SCREEN

A515

Door type:	Sliding door
Door handle:	Stainless steel
Glass:	tempered glass 4 / 5 / 6 mm

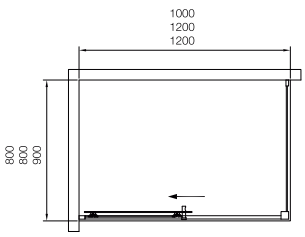

800 x 1000 x 1850 mm
800 x 1200 x 1850 mm
900 x 1200 x 1850 mm

4 / 5 / 6 mm

15 mm

Easy Clean runner system

Chromed door handle

A511

Door type:	Sliding door
Door handle:	Stainless steel
Glass:	tempered glass 4 / 5 / 6 mm

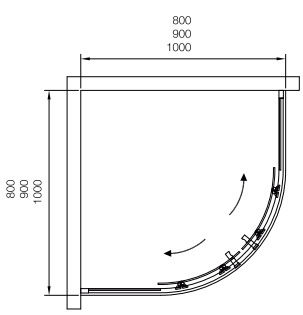

800 x 800 x 1850 mm
900 x 900 x 1850 mm
1000 x 1000 x 1850 mm

4 / 5 / 6 mm

15 mm

Quick release door runners

A513

Door type: Sliding door
Door handle: Stainless steel
Glass: tempered glass 4 / 5 / 6 mm

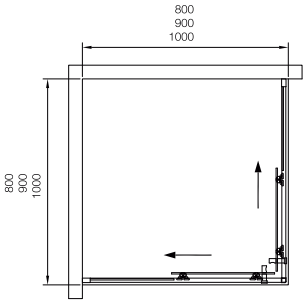

800 x 800 x 1850 mm
900 x 900 x 1850 mm
1000 x 1000 x 1850 mm

4 / 5 / 6 mm

15 mm

A516

Door type: Pivot door
Door handle: Stainless steel
Glass: tempered glass 4 / 5 / 6 mm

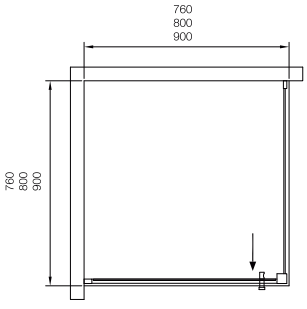

760 x 760 x 1850 mm
800 x 800 x 1850 mm
900 x 900 x 1850 mm

4 / 5 / 6 mm

15 mm

FA512

Door type: Sliding door
Door handle: Stainless steel
Glass: tempered glass 4 / 5 / 6 mm

1000 x 1850 mm
1100 x 1850 mm
1200 x 1850 mm
1400 x 1850 mm

4 / 5 / 6 mm

30 mm

FA516

Door type: Pivot door
Door handle: Stainless steel
Glass: tempered glass 4 / 5 / 6 mm

760 x 1850 mm
800 x 1850 mm
900 x 1850 mm

4 / 5 / 6 mm

30 mm

DUSEL

A9 SERIES

The A9 shower enclosure series features decorative frame covers with hidden screw heads. Available in all our door types this series is ready for any kind of installation.

CORNER ROUND SCREEN

A902

Door type:	Pivot door
Door handle:	Stainless steel
Pivot material:	Brass
Glass:	tempered glass 6 mm

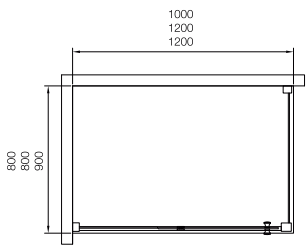

800 x 1000 x 1850 mm
800 x 1200 x 1850 mm
900 x 1200 x 1850 mm

6 mm 20 mm

Chromed brass pivot door hinge

Chromed brass pivot door hinge

A901

Door type:	Pivot door
Door handle:	Stainless steel
Pivot material:	Brass
Glass:	tempered glass 6 mm

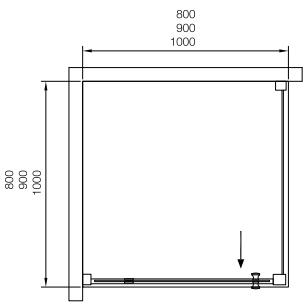

800 x 800 x 1850 mm
900 x 900 x 1850 mm
1000 x 1000 x 1850 mm

6 mm 20 mm

FA901

Door type:	Pivot door
Pivot material:	Brass
Door handle:	Stainless steel
Glass:	tempered glass 6 mm

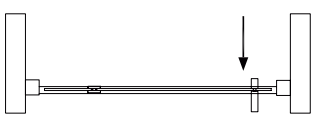

800 x 1850 mm
900 x 1850 mm
1000 x 1850 mm

6 mm 40 mm

FA902

Door type:	Pivot door
Pivot material:	Brass
Door handle:	Stainless steel
Glass:	tempered glass 6 mm

1000 x 1850 mm
1100 x 1850 mm
1200 x 1850 mm
1400 x 1850 mm

6 mm 40 mm

A910

Door type:	Sliding door
Door handle:	Stainless steel
Roller:	Chromed-plated zinc alloy
Glass:	tempered glass 6 mm

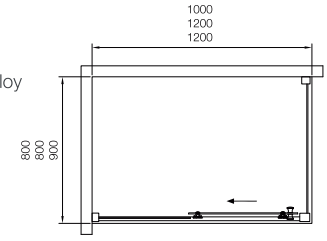

800 x 1000 x 1850 mm
800 x 1200 x 1850 mm
900 x 1200 x 1850 mm

6 mm 20 mm

A911

Door type:	Sliding door
Door handle:	Stainless steel
Roller:	Chrome-plated zinc alloy
Glass:	tempered glass 6 mm

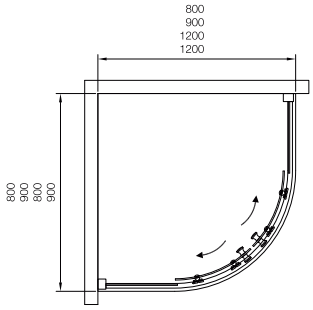

800 x 800 x 1850 mm
900 x 900 x 1850 mm
800 x 1200 x 1850 mm
900 x 1200 x 1850 mm

6 mm 20 mm

A912

Door type: Sliding door
Door handle: Stainless steel
Glass: tempered glass 6 mm

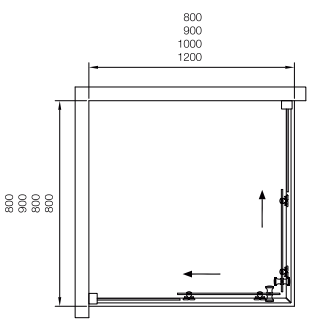

800 x 800 x 1850 mm
900 x 900 x 1850 mm
800 x 1000 x 1850 mm
800 x 1200 x 1850 mm

6 mm 20 mm

FA903

Door type: Sliding door
Roller: Chromed-plated Zinc Alloy
Door handle: Stainless steel
Glass: tempered glass 6 mm

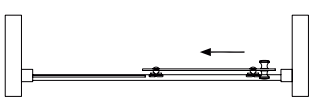

1000 x 1850 mm
1100 x 1850 mm
1200 x 1850 mm
1400 x 1850 mm

6 mm 40 mm

Chromed aluminium profiles

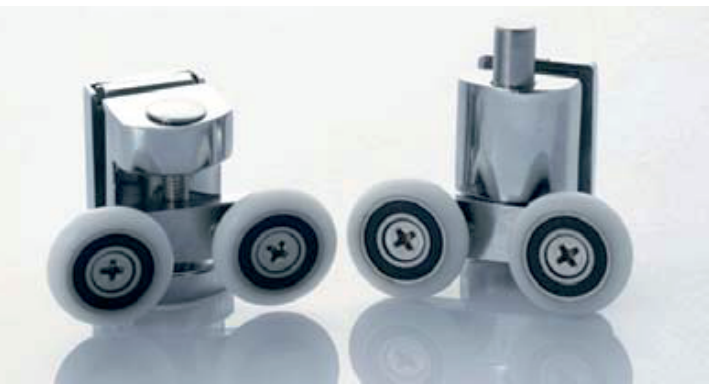

Chromed zinc alloy double wheel rollers

FA920

Door type:	Fold-in door
Door handle:	D1204 handle
Glass:	tempered glass 6 mm

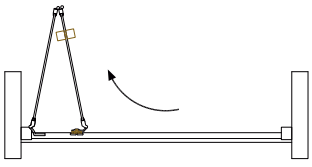

800 x 1850 mm
900 x 1850 mm
1000 x 1850 mm

6 mm

40 mm

A920/FA920 door folding mechanism

A920

Door type:	Fold-in door
Door handle:	D1204 handle
Glass:	tempered glass 6 mm

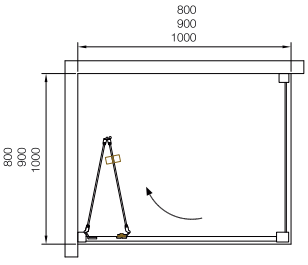

800 x 800 x 1850 mm
900 x 900 x 1850 mm
1000 x 1000 x 1850 mm

6 mm 20 mm

A6 SERIES

The A6 shower enclosure series features aluminium magnetic stripe door seals, hidden screws and elegant decoration covers for the vertical bars. All models feature our very own smooth opening aluminium shaft door system and very strong water-proof performance.

CORNER SCREEN

A631

Door type:	Pivot door
Opening:	Outwards and inwards
Door handle:	Stainless steel
Glass:	tempered glass 6 mm

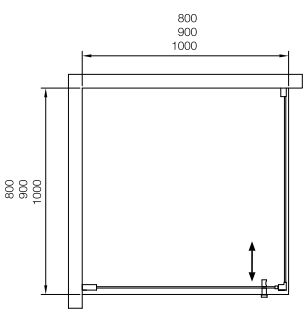

800 x 800 x 1900 mm
900 x 900 x 1900 mm
1000 x 1000 x 1900 mm

6 mm 15 mm

A63 series pivot door hinge

Stainless steel door handle

Precisely manufactured door frame

A632

Door type:	Pivot door
Door handle:	Stainless steel
Glass:	tempered glass 6 mm

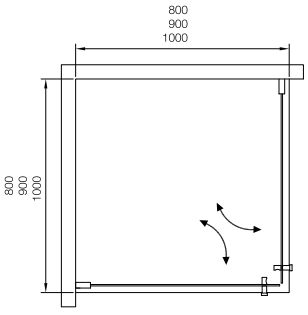

800 x 800 x 1900 mm
900 x 900 x 1900 mm
1000 x 1000 x 1900 mm

6 mm 15 mm

A633

Door type: Pivot door
Door handle: Stainless steel
Glass: tempered glass

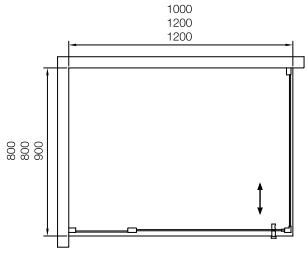

800 x 1000 x 1900 mm
800 x 1200 x 1900 mm
900 x 1200 x 1900 mm

6 mm 15 mm

FA631

Door type: Pivot door
Door handle: Stainless steel
Glass: tempered glass 6 mm

800 x 1900 mm
900 x 1900 mm
1000 x 1900 mm

6 mm 30 mm

FA632

Door type: Pivot door
Door handle: Stainless steel
Glass: tempered glass 6 mm

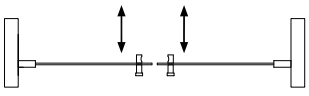

800 x 1900 mm
900 x 1900 mm
1000 x 1900 mm
1100 x 1900 mm
1200 x 1900 mm

6 mm 30 mm

FA633

Door type: Pivot door
Door handle: Stainless steel
Glass: tempered glass 6 mm

1200 x 1900 mm
1400 x 1900 mm
1500 x 1900 mm
1600 x 1900 mm

6 mm 30 mm

A652

Door type: Pivot door
Door handle: Stainless steel
Glass: tempered glass 6 mm

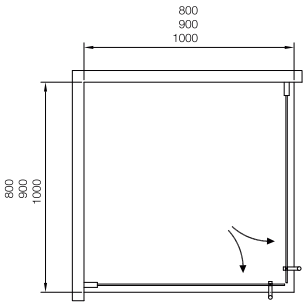

800 x 800 x 1850 mm
900 x 900 x 1850 mm
1000 x 1000 x 1850 mm

6 mm 20 mm

A653

Door type: Pivot door
Door handle: Stainless steel
Glass: tempered glass 6 mm

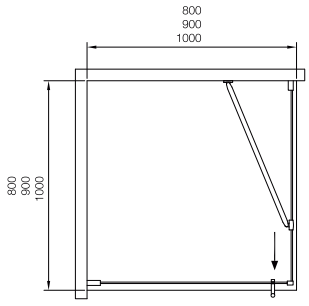

800 x 800 x 1850 mm
900 x 900 x 1850 mm
1000 x 1000 x 1850 mm

6 mm 20 mm

A65 series chromed top support bar

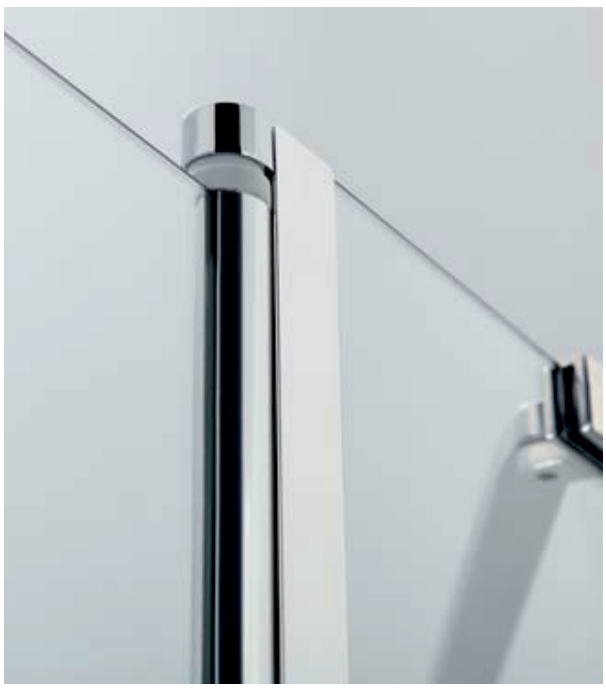

A65 series pivot door hinge

A65 series chromed door handle

A656

Door type:	Pivot door
Door handle:	Stainless steel
Glass:	tempered glass 6 mm

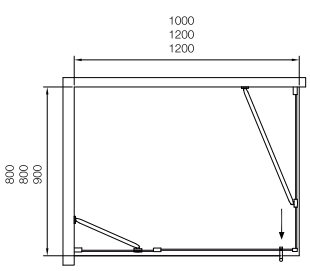

800 x 1000 x 1850 mm
800 x 1200 x 1850 mm
900 x 1200 x 1850 mm

6 mm

20 mm

FA651

Door type: Pivot door
Door handle: Stainless steel
Glass: tempered glass 6 mm

800 x 1850 mm
900 x 1850 mm
1000 x 1850 mm

6 mm 40 mm

FA652

Door type: Pivot door
Door handle: Stainless steel
Glass: tempered glass 6 mm

800 x 1850 mm
900 x 1850 mm
1000 x 1850 mm
1100 x 1850 mm

6 mm 40 mm

FA653

Door type: Pivot door
Door handle: Stainless steel
Glass: tempered glass 6 mm

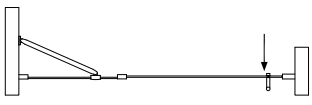

1200 x 1850 mm
1400 x 1850 mm
1500 x 1850 mm
1600 x 1850 mm

6 mm 40 mm

FA657

Door type: Pivot door
Door handle: Stainless steel
Glass: tempered glass, 6 mm

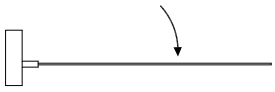

800 x 1400 mm

6 mm 20 mm

FA658

Door type: Pivot door
Door handle: Stainless steel
Glass: tempered glass, 6 mm

1200 x 1400 mm

6 mm 20 mm

A11 SERIES

The A11 shower enclosure series features decorative frame decoration covers. The FAST & EASY installation system is standard to all models of this series.

CORNER ROUND DIAMOND

Chrome-plated zinc alloy pivot

Stainless steel door handle

A1106

Door type:	Pivot door
Door handle:	Stainless steel
Support bar:	Stainless steel
Pivot material:	Chrome-plated zinc alloy
Glass:	tempered glass 6 / 8 mm

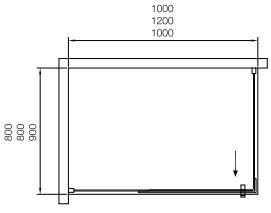

800 x 1000 x 1850 mm
800 x 1200 x 1850 mm
900 x 1200 x 1850 mm

6 / 8 mm 20 mm

A1104

Door type:	Pivot door
Door handle:	Stainless steel
Support bar:	Stainless steel
Pivot material:	Chrome-plated zinc alloy
Glass:	tempered glass 6 / 8 mm

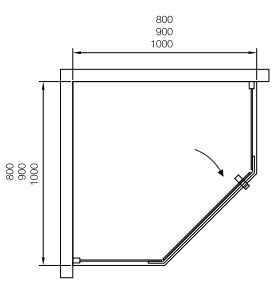

800 x 800 x 1850 mm
900 x 900 x 1850 mm
1000 x 1000 x 1850 mm

6 / 8 mm 20 mm

A1105

Door type:	Pivot door
Door handle:	Stainless steel
Support bar:	Stainless steel
Pivot material:	Chrome-plated zinc alloy
Glass:	tempered glass 6 / 8 mm

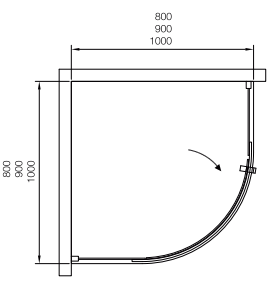

800 x 800 x 1850 mm
900 x 900 x 1850 mm
1000 x 1000 x 1850 mm

6 / 8 mm 20 mm

A71 series stainless steel wall mount bracket

A71 series chromed brass hinge

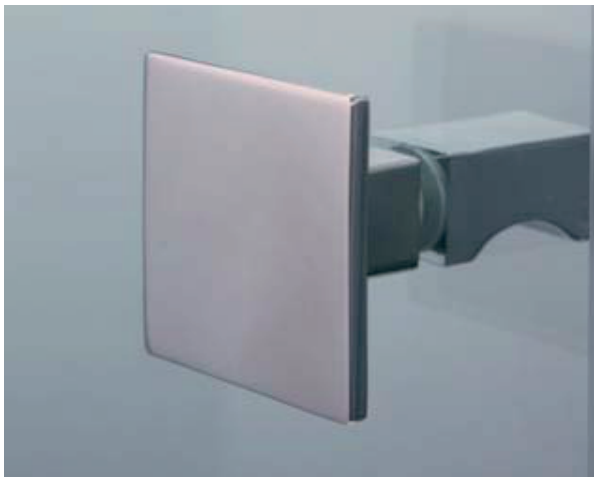

A71 series stainless steel door handle

A7 SERIES

Slim design and stability are ideally combined in the A7 shower enclosure series. Elegant vertical decoration covers and strong top mount arms allow for a design without horizontal profiles.

A713

Door type:	Hinge door
Door handle:	Stainless steel
Glass:	tempered glass 6 / 8 mm

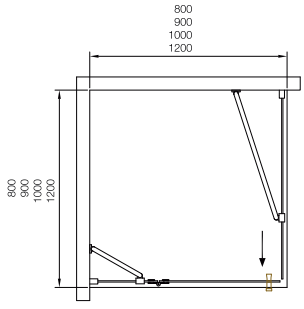

800 x 800 x 1850 mm
900 x 900 x 1850 mm
800 x 1000 x 1850 mm
800 x 1200 x 1850 mm

6 / 8 mm 20 mm

A711

Door type: Hinge door
Door handle: Stainless steel
Glass: tempered glass 6 / 8 mm

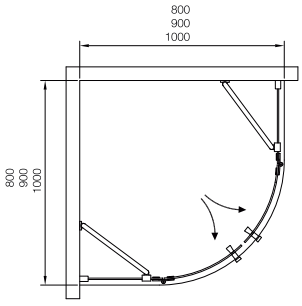

800 x 800 x 1850 mm
900 x 900 x 1850 mm
1000 x 1000 x 1850 mm

6 / 8 mm 20 mm

A712

Door type: Hinge door
Door handle: Stainless steel
Support bar: Stainless steel
Hinge type: Lifting hinge
Glass: tempered glass 6 / 8 mm

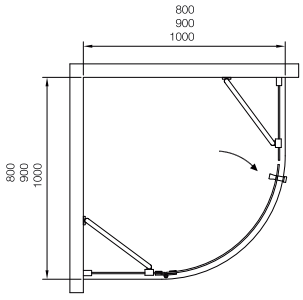

800 x 800 x 1850 mm
900 x 900 x 1850 mm
1000 x 1000 x 1850 mm

6 / 8 mm 20 mm

A714

Door type: Hinge door
Door handle: Stainless steel
Glass: tempered glass 6 / 8 mm

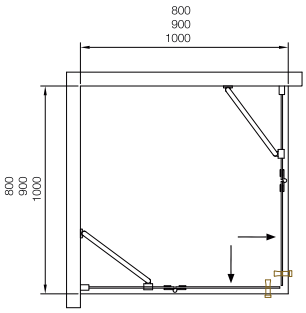

800 x 800 x 1850 mm
900 x 900 x 1850 mm
1000 x 1000 x 1850 mm

6 / 8 mm 20 mm

A715

Door type: Hinge door
Door handle: Stainless steel
Glass: tempered glass 6 / 8 mm

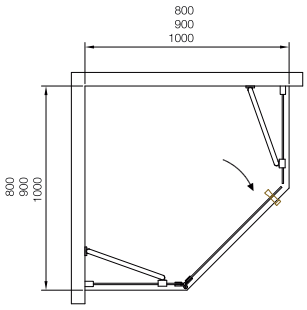

800 x 800 x 1850 mm
900 x 900 x 1850 mm
1000 x 1000 x 1850 mm

6 / 8 mm 20 mm

FA711

Door type: Screen hinge
Door handle: Stainless steel
Glass: tempered glass 6 / 8 mm

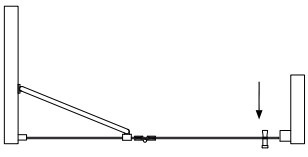

1000 x 1850 mm
1100 x 1850 mm
1200 x 1850 mm
1400 x 1850 mm
1500 x 1850 mm

6 / 8 mm 40 mm

FA712

Door type: Screen hinge
Door handle: Stainless steel
Glass: tempered glass 6 / 8 mm

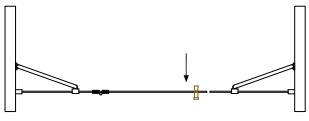

1200 x 1850 mm
1400 x 1850 mm
1500 x 1850 mm
1600 x 1850 mm

6 / 8 mm 40 mm

DA

After a long and hard day you are looking forward to a break, time for yourself and relaxation. Freestanding Dusel bathtubs incorporate modern design, ergonomic shapes and attention to detail. All Dusel products are carefully designed and engineered for a great bath experience, long product life and minimalist aesthetics.

Choose from a range of different shapes and dimensions. All Dusel bathtubs feature premium acrylic surfaces and built-in drainers with overflow and siphon.

1. Overflow Drainer
All DA Series bathtubs feature a built-in overflow system with a neat decorative chrome cover. The overflow makes sure that the water stays where it is meant to.

2. Push-to-Open Drainer
A pre-fitted drainer is part of all DA Series bathtubs. A clever Push-to-Open mechanism means no bulky handle, clean lines and practicality in one.

Dusel Bathtubs & Dusel Shower Enclosures: Perfect Companion

Dusel freestanding acrylic bathtubs have been designed to perfectly match the clear lines of Dusel shower enclosures.

Ask your authorized Dusel retailer for more information about Dusel shower enclosures.

DUSEL

DA 103 ASTI

Material	Sanitary Acrylic
Supporting Frame	Galvanized steel frame height-adjustable feet
Features	Push-to-open Drainer (50 mm) Overflow Siphon
Water Capacity	247 liters (1600 mm) 269 liters (1700 mm)
Gross Weight	45 kg (1600 mm) 47 kg (1700 mm)

1600 mm

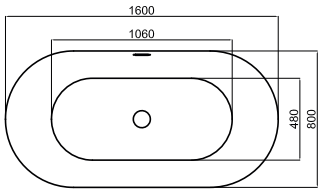

1700 mm

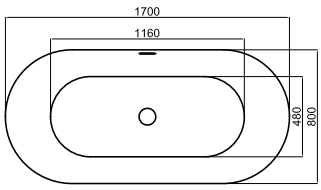

1600 & 1700 mm

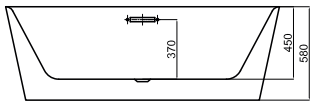

1600 x 800 x 580 mm
1700 x 800 x 580 mm

DA 103 ASTI BLACK

Material	Sanitary Acrylic
Supporting Frame	Galvanized steel frame height-adjustable feet
Features	Push-to-open Drainer (50 mm) Overflow Siphon
Water Capacity	247 liters (1600 mm) 269 liters (1700 mm)
Gross Weight	45 kg (1600 mm) 47 kg (1700 mm)

1600 mm

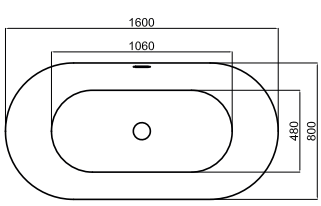

1700 mm

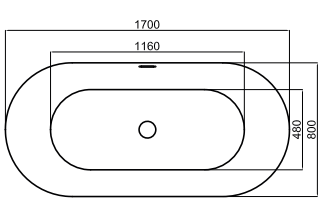

1600 & 1700 mm

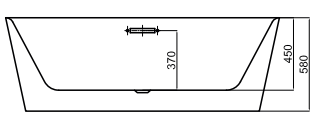

1600 x 800 x 580 mm
1700 x 800 x 580 mm

DUSEL

DA 104 SIENA

Material	Sanitary Acrylic
Supporting Frame	Galvanized steel frame height-adjustable feet
Features	Push-to-open Drainer (50 mm) Overflow Siphon
Water Capacity	245 liters (1700 mm) 266 liters (1800 mm)
Gross Weight	50 kg (1700 mm) 53 kg (1800 mm)

1700 mm

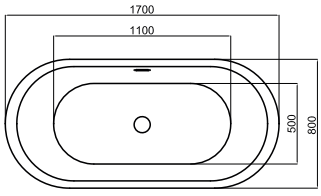

1800 mm

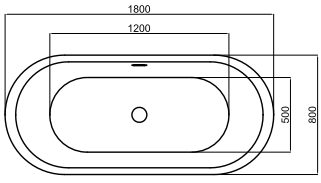

1700 & 1800 mm

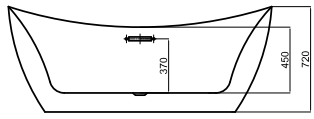

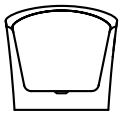

1700 x 800 x 720 mm
1800 x 800 x 720 mm

DUSEL

DA 106 PISA

Material	Sanitary Acrylic
Supporting Frame	Galvanized steel frame height-adjustable feet
Features	Push-to-open Drainer (50 mm) Overflow Siphon
Water Capacity	319 liters
Gross Weight	52 kg

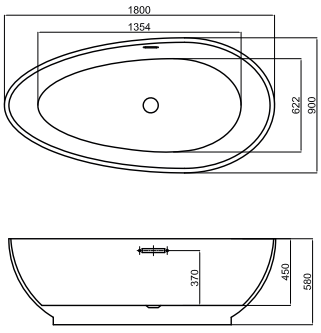

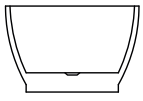

1800 x 900 x 580 mm

DUSEL

DA 108 Lucca

Material	Sanitary Acrylic
Supporting Frame	Galvanized steel frame height-adjustable feet
Features	Push-to-open Drainer (50 mm) Overflow Siphon
Water Capacity	312 liters
Gross Weight	53 kg

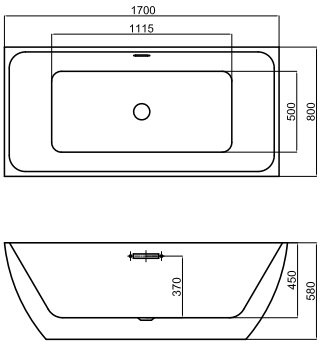

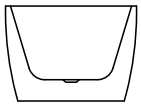

1700 x 800 x 580 mm

DA 111 SARNO

Material	Sanitary Acrylic	
Supporting Frame	Galvanized steel frame height-adjustable feet	
Features	Push-to-open Drainer (50 mm) Overflow Siphon	
Water Capacity	176 liters (1455 mm) 218 liters (1655 mm)	194 liters (1555 mm) 240 liters (1800 mm)
Gross Weight	40 kg (1455 mm) 44 kg (1655 mm)	41 kg (1555 mm) 47 kg (1800 mm)

1455 x 750 x 580 mm
1555 x 750 x 580 mm
1655 x 750 x 580 mm
1800 x 750 x 580 mm

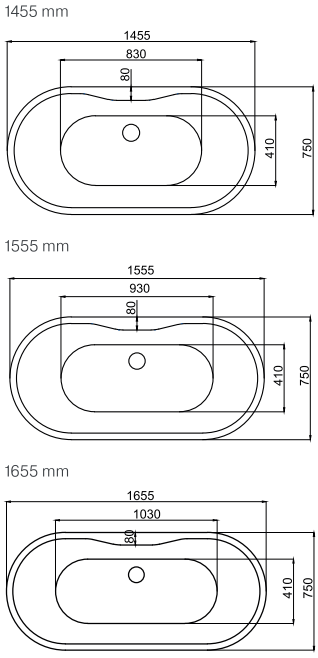

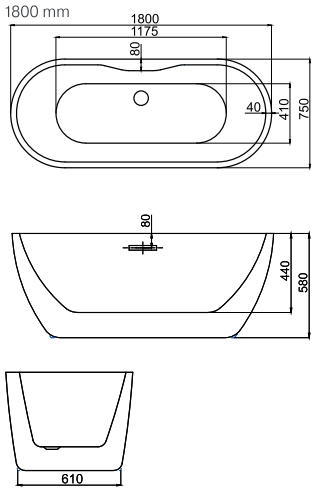

DA 111 SARNO BLACK

Material	Sanitary Acrylic	
Supporting Frame	Galvanized steel frame height-adjustable feet	
Features	Push-to-open Drainer (50 mm) Overflow Siphon	
Water Capacity	176 liters (1455 mm) 218 liters (1655 mm)	194 liters (1555 mm) 240 liters (1800 mm)
Gross Weight	40 kg (1455 mm) 44 kg (1655 mm)	41 kg (1555 mm) 47 kg (1800 mm)

1455 x 750 x 580 mm
1555 x 750 x 580 mm
1655 x 750 x 580 mm
1800 x 750 x 580 mm

1455 mm

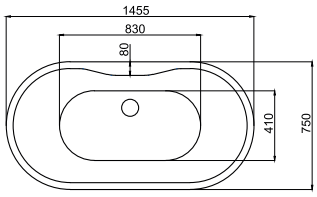

1555 mm

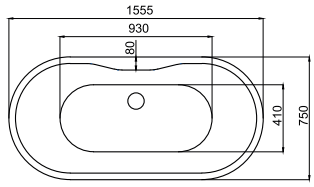

1655 mm

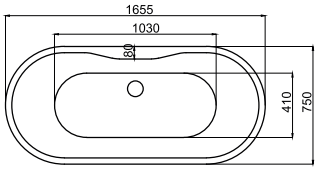

1800 mm

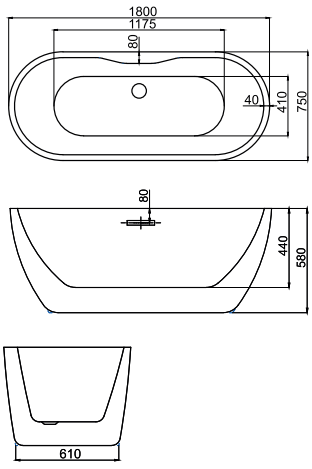

D102 Easy Plumb shower tray

SHOWER TRAYS

DUSEL produces all shower trays and shower enclosures in-house. This allows us to control the quality of the complete production process and make sure that our shower trays and shower enclosures precisely match each other.

Shower trays are available in a range of different dimensions and shapes. Each model integrates precise manufacturing, durability and high quality finish.

DUSEL

EASY PLUMB SERIES

High quality shower trays designed for easy installation. Available in a range of different shapes and dimensions.

D102

ABS shower tray
Metal frame with adjustable legs

760 x 760 x 135 mm
800 x 800 x 135 mm
900 x 900 x 135 mm
1000 x 1000 x 135 mm

D104

ABS shower tray
Metal frame with adjustable legs

800 x 1000 x 135 mm
800 x 1100 x 135 mm
800 x 1200 x 135 mm
800 x 1400 x 135 mm
900 x 1200 x 135 mm
900 x 1400 x 135 mm

D202

ABS shower tray
Metal frame with adjustable legs

700 x 700 x 135 mm
800 x 800 x 135 mm
900 x 900 x 135 mm
1000 x 1000 x 135 mm

D204L

ABS shower tray
Metal frame with adjustable legs

760 x 900 x 135 mm
800 x 1000 x 135 mm
800 x 1200 x 135 mm
900 x 1200 x 135 mm

D204R

ABS shower tray
Metal frame with adjustable legs

760 x 900 x 135 mm
800 x 1000 x 135 mm
800 x 1200 x 135 mm
900 x 1200 x 135 mm

D302

ABS shower tray
Metal frame with adjustable legs

900 x 900 x 135 mm

D402

ABS shower tray
Metal frame with adjustable legs

900 x 900 x 135 mm

DUSEL: GERMAN DESIGN & QUALITY CONCEPT.